Hydromodul HM

Installation manual

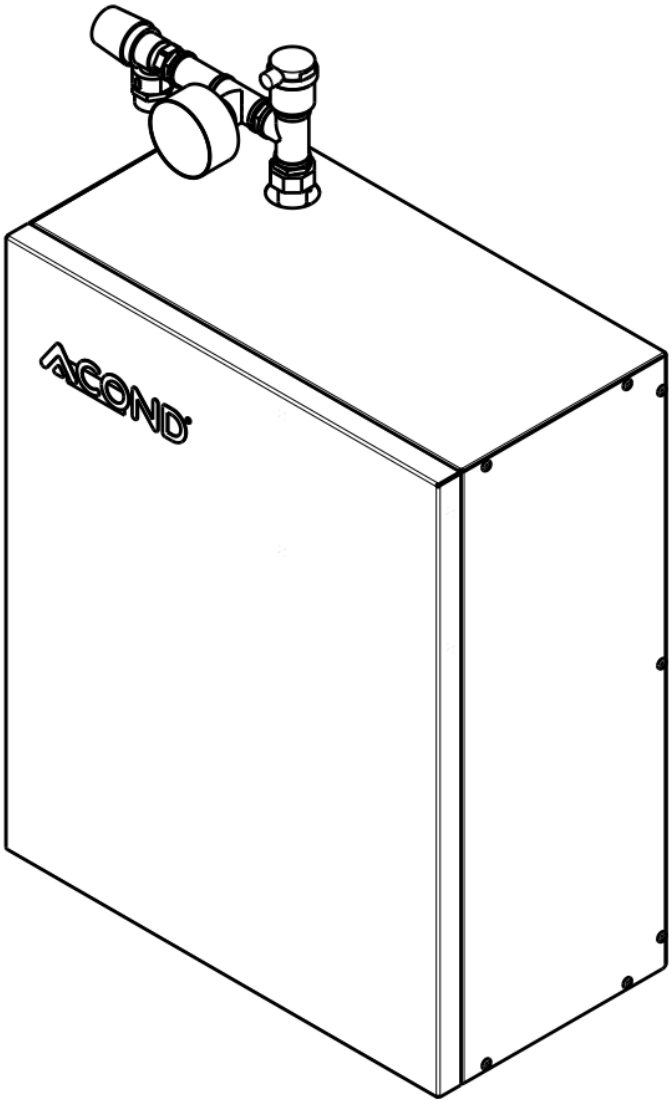

Tel.: 382 521 202 | E-mail: info@acond.cz | Servis: 601 373 073 | IČO: 27154505 | DIČ CZ27154505 | Bankovní spojení: 191623146/0300
Společnost je zapsána v oddílu B, vložka 9370 obchodního rejstříku vedeného u Městského soudu v Praze. | **www.acond.cz**

1 Explanation of symbols, Documentation validity 2

1.1 Used symbols 2

1.1 Documentation validity 2

2 Important information 2

2.1 Function 2

2.1.1 Installation 3

2.1.2 Use as intended 3

2.1.3 Danger to life or health due to changes in the product or its surroundings 3

2.1.4 Fire-fighting equipment 3

3 Models 3

4 Parameters 4

4.1 Performance parameters 4

5 Internal scheme 5

5.1 Components 6

6 Installation location 7

6.1 Hydromodul 7

6.1.1 Electrical preparation 8

6.2 Indoor room unit 8

7 Installation 8

7.1 Mounting of the attached assembly 8

7.2 Mounting of the Hydromodulu 9

7.3 Hydraulic connection 9

7.3.1 Safety valve 10

7.3.2 Mandatory hydraulic components 11

7.4 Filling the heating system 11

7.5 Electrical wiring and commissioning 12

7.6 Cleaning after installation 13

8 Parameters setting 13

9 Operation 13

9.1 Circulation pump operation and maintenance 14

9.1.1 Circulation pump Grundfos UPM3 15-70 130 14

9.1.2 Circulation pump malfunction 14

9.2 Checking the pressure of the heating system 14

9.3 Safety valve check 14

9.4 Disconnect from the mains 15

9.5 Cleaning 15

10 E-heater thermostat reset 15

11 Warranty 16

12 Service 16

1 Explanation of symbols, Documentation validity

1.1 Used symbols

Important information not including either hazards posed to persons or material values are highlighted in blue with the symbol *i*. They are separated from text by commas above and below it.

Warning remarks in the text are indicated by a red warning triangle with a white exclamation point and enclosed by a frame.

1.1 Documentation validity

The instructions specified herein are valid for Hydromodul **ACOND®** with **ACOND® THERM** regulation with SW versions 150.XX and 160.XX.

If these instructions are not followed during installation, operation and maintenance, then the obligations of **ACOND a.s.** stemming from the terms of the warranty shall cease to apply.

ACOND a.s. hereby reserves the right to make changes to any parts of the documentation and specifications without prior notice.

© 03/2023 Copyright **ACOND a.s.**

2 Important information

The hydromodule is a separately functional unit, but it can also be installed with an Acond heat pump if the conditions specified in this manual are met

The device must not operate persons with limited mental abilities or lack of experience and knowledge (including children) unless they are under supervision of instructed persons responsible for their safety.

2.1 Function

The Hydromodule heats the heating water using a flow-through heating element and further forces it to circulate in the heating system by means of a circulation pump or by switching the three-way valve it can heat DHW in an indirectly heated water tank.

2.1.1 Installation

- Comply with local regulations
- Installation, maintenance and repairs may only be carried out by authorized installers (see chapter 12)

2.1.2 Use as intended

The device is safe under normal conditions. Improper use or use contrary to the instructions may endanger the life, health of the user, damage to the product or the environment.

2.1.3 Danger to life or health due to changes in the product or its surroundings

Do not make the following changes:

On product

On water inlets

On electricity supply

On safety valves

2.1.4 Fire-fighting equipment

In case of unforeseen circumstances and improper operation of the equipment, it may be damaged and cause a fire. To extinguish the fire, it is necessary to use fire extinguishers suitable for extinguishing electrical equipment, i.e.

- Powder fire extinguisher
- Snow fire extinguisher
- Gas fire extinguisher

3 Models

According to the possibility of connecting a heat pump of the Acond brand, the models of the Hydromodule are distinguished, which differ only in the electrical part of the Hydromodule. For the given model, it is necessary to prepare the correct protection in the home switchboard and bring the correct cables, see the attached diagrams.

Hydromodul	Heat pump	Supply voltage code; Circuit breaker
Hydromodul PRO-N	PRO-N	3~N/PE/400V/50Hz; B16A*
Hydromodul PRO-N SP	PRO-N SP	1~N/PE/230V/50Hz; B32A*
Hydromodul PRO-R	PRO-R	3~N/PE/400V/50Hz; B20A*

Hydromodul PRO-R SP	PRO-R SP	1~N/PE/230V/50Hz; B50A*
Hydromodul Grandis-N	Grandis-N	3~N/PE/400V/50Hz; B16A*
Hydromodul Grandis-N SP	Grandis-N SP	1~N/PE/230V/50Hz; B32A*
Hydromodul Grandis-R	Grandis-R	3~N/PE/400V/50Hz; B20A*
Hydromodul Grandis-R SP	Grandis-R SP	1~N/PE/230V/50Hz; B50A*

* Comply with local regulations

4 Parameters

The Hydromodule is a compact solution for heating water, heating water circulation and at the same time, after connection to an indirect hot water tank, it heats it to the desired temperature.

Height x Width x Depth [mm]	709 x 457 x 240
Weight [kg]	22
Protection class	IP20
Max pressure of the heating system [bar]	3
Maximum heating water temperature [°C]	85
Minimum heating water temperature [°C]	20
Hydraulic connection	G1" M
Heat output [kW]	6
Maximum height of the heating system [m]	7

*The pressure in the heating system is designed by the plumbing company according to the parameters of the object and writes the value on the label and attached to the Hydromodule

4.1 Performance parameters

The following graphs show the dependence of the height of the object on the flow through the heating system and the power input of the circulation pump on the flow. The pump has 3 different power settings.

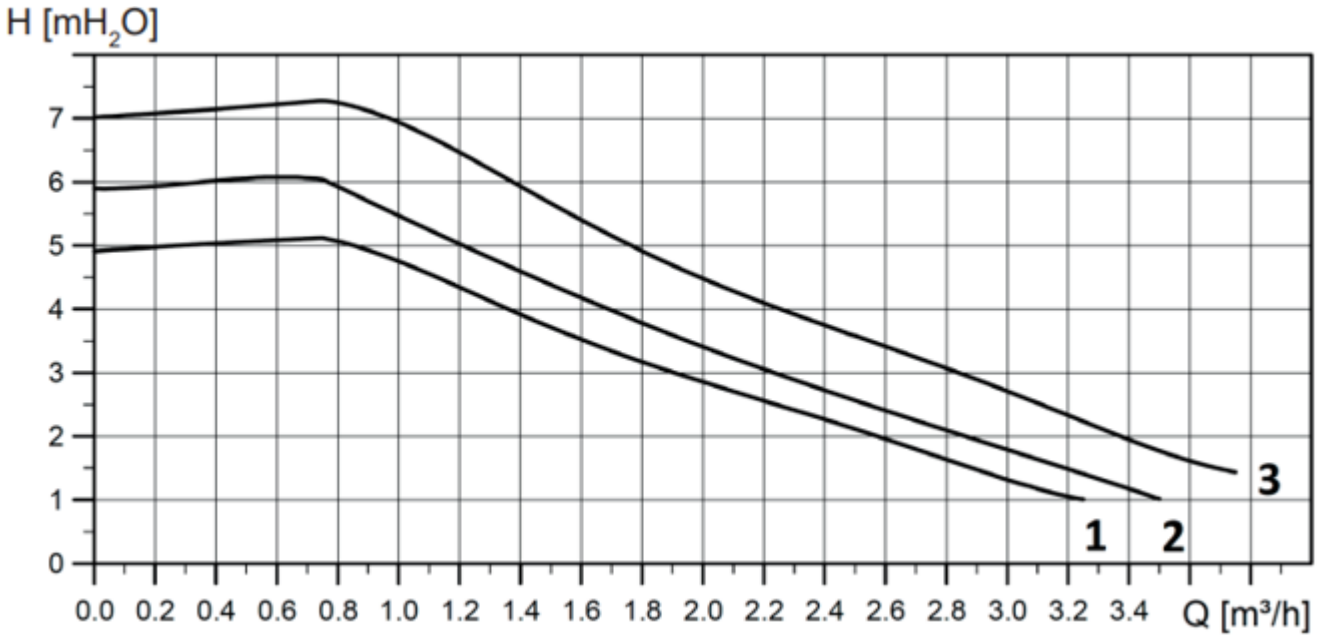

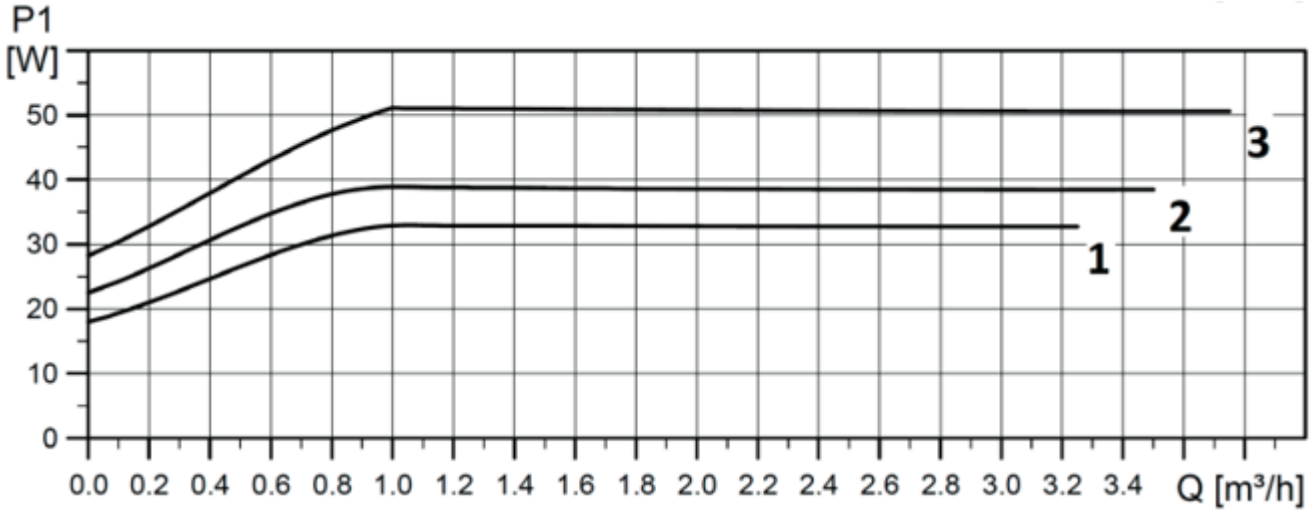

5 Internal scheme

The internal diagram shown in the following picture is for illustrative purposes only.

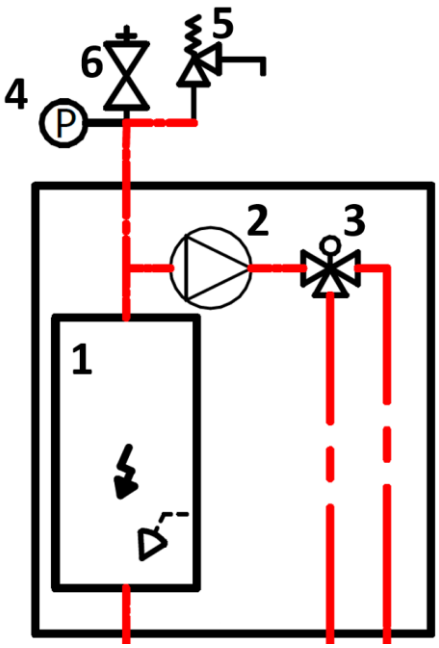

Obrázek 1 Vnitřní schéma

5.1 Components

Components at positions 4, 5 and 6 can be replaced with any equivalent parts suitable for the stated maximum operating pressure and temperatures.

> Z Heating water can leak out of the pressure relief valve in the event of a malfunction, so a hose leading to the drain must be connected to it.

Table 1 – Table of components

No.	Components	Original component	Possible replacement
1	E-Heater	Acond EK6-335	-
2	Circulation pump	Grundfos UPM3 15-70 130 Hybrid	Grundofos Alpha1 15-80 130
3.1	Three-way valve	Lufberg ZV3A-25-13	-
3.	Three-way valve motor	Lufberg ZV-A230	-
4	Pressure gauge	-	-
5	Safety pressure relief valve	-	-
6	Vent valve	-	-

6 Installation location

6.1 Hydromodul

The utility room must be spacious enough and dry. The air temperature must be between 10°C and 35°C and the relative humidity should not permanently exceed 70%.

> Under no circumstances must the Hydromodule be installed on walls made of flammable materials!

The spatial demands of the installation are drawn in Picture 2, where the minimum distances to obstacles are shown.

> Failure to comply with the minimum distances from other objects at the installation site will increase the price of the service paid by the customer.

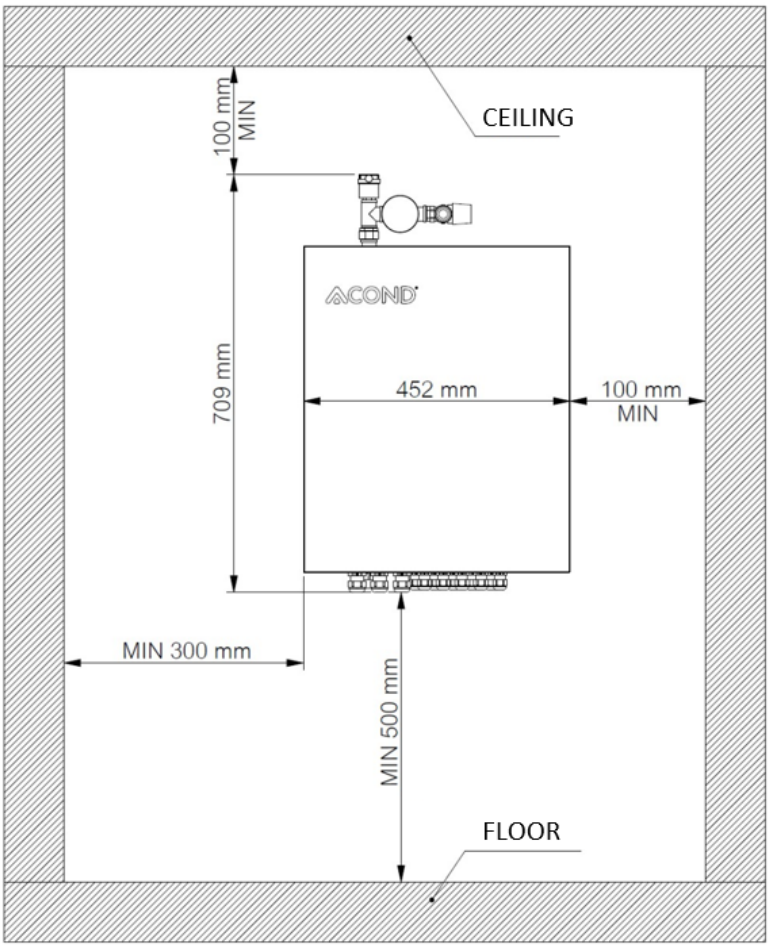

Picture 2 Minimal space requirements

6.1.1 Electrical preparation

The electrical connection is made from the bottom side, where leave a free cable length of at least 2m. The cables to be brought in are given by the diagrams annexed to this document.

6.2 Indoor room unit

The indoor C-ID room unit shall be placed in a heated reference room. The heating rod will be switched if the temperature in the reference room unit drops below the set temperature in the AcondTherm regulation.

A thermostatic valve shall not be placed in the reference room.

7 Installation

When installing, follow the order as shown below.

7.1 Mounting of the attached assembly

Attach the included assembly with pliers above the Hydromodule covers, see the following picture. Use the seal correctly.

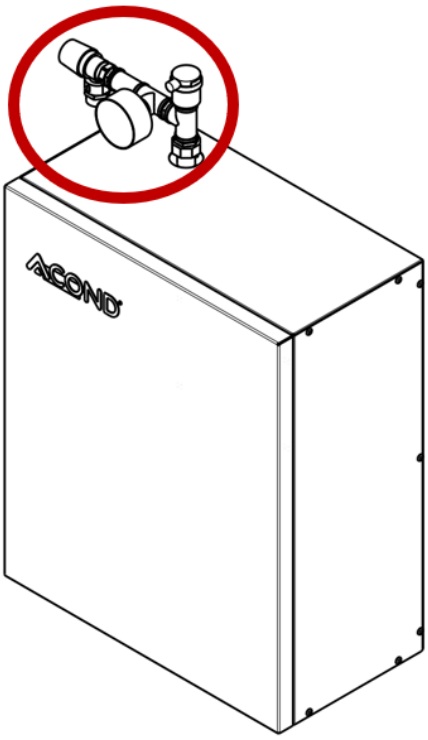

7.2 Mounting of the Hydromodulu

The anchor profile, which is attached inside the Hydromodule, is mounted to the wall by means of 2 dowels and screws. Holes for screws are ø7mm. Subsequently, the Hydromodule is hung on this profile.

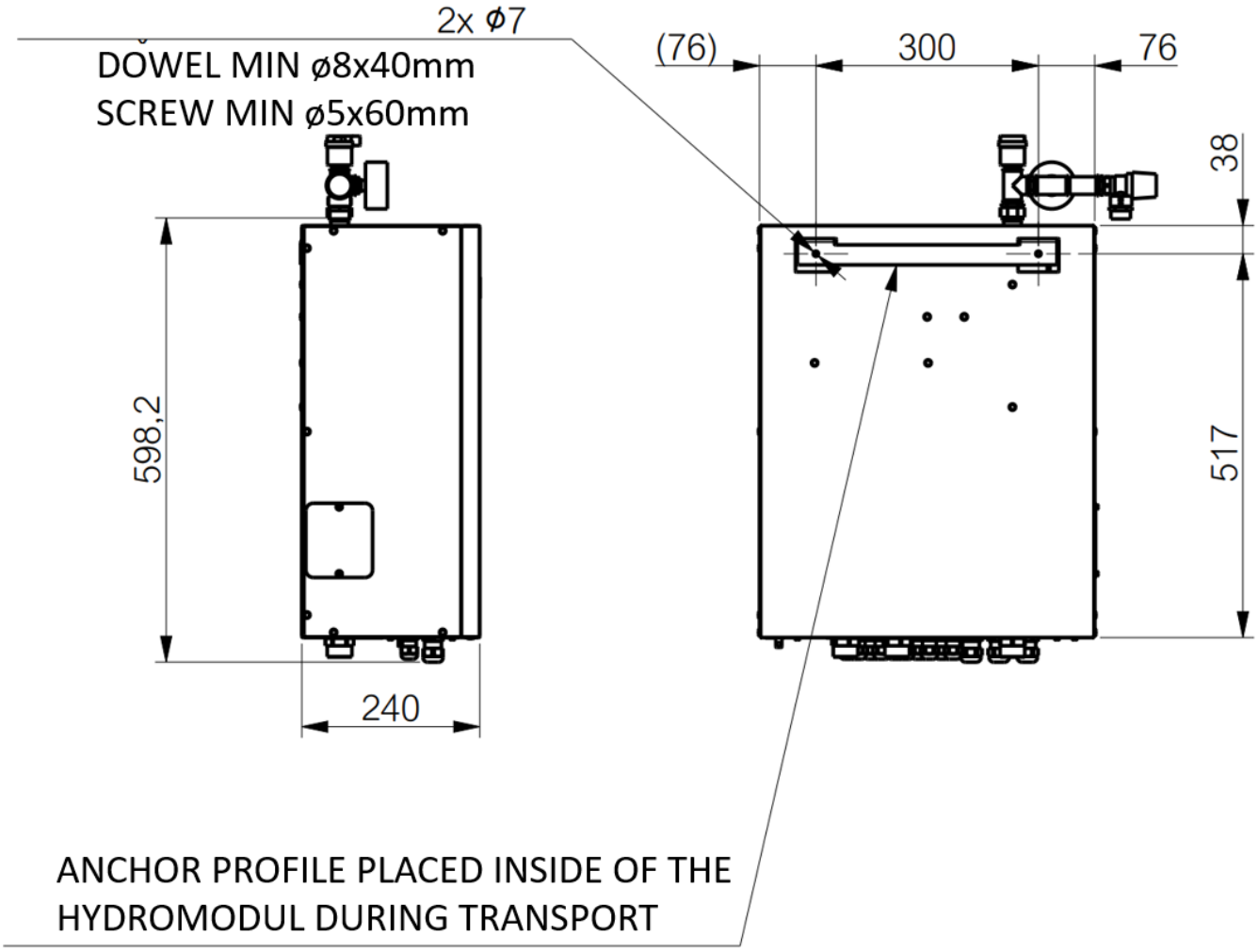

7.3 Hydraulic connection

The Hydromodule is connected from the bottom side, see the following picture.

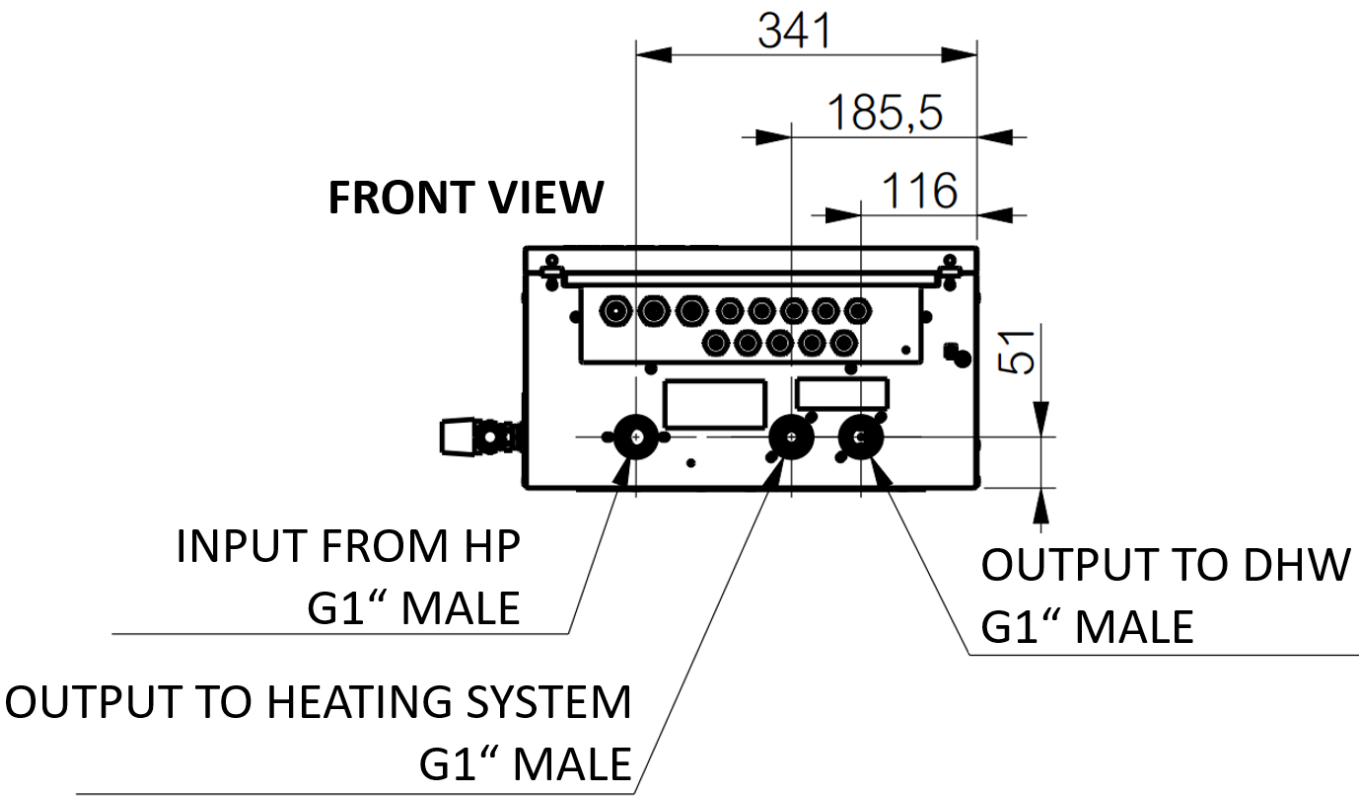

The hydraulic connection changes according to customer requirements, the parameters of the heated building and the selected optional equipment. For an example of hydraulic connection, see the following figure.

7.3.1 Safety valve

A hose/pipe is connected to the safety valve, which is located above the Hydromodule covers, and is led below the level of the Hydromodule.

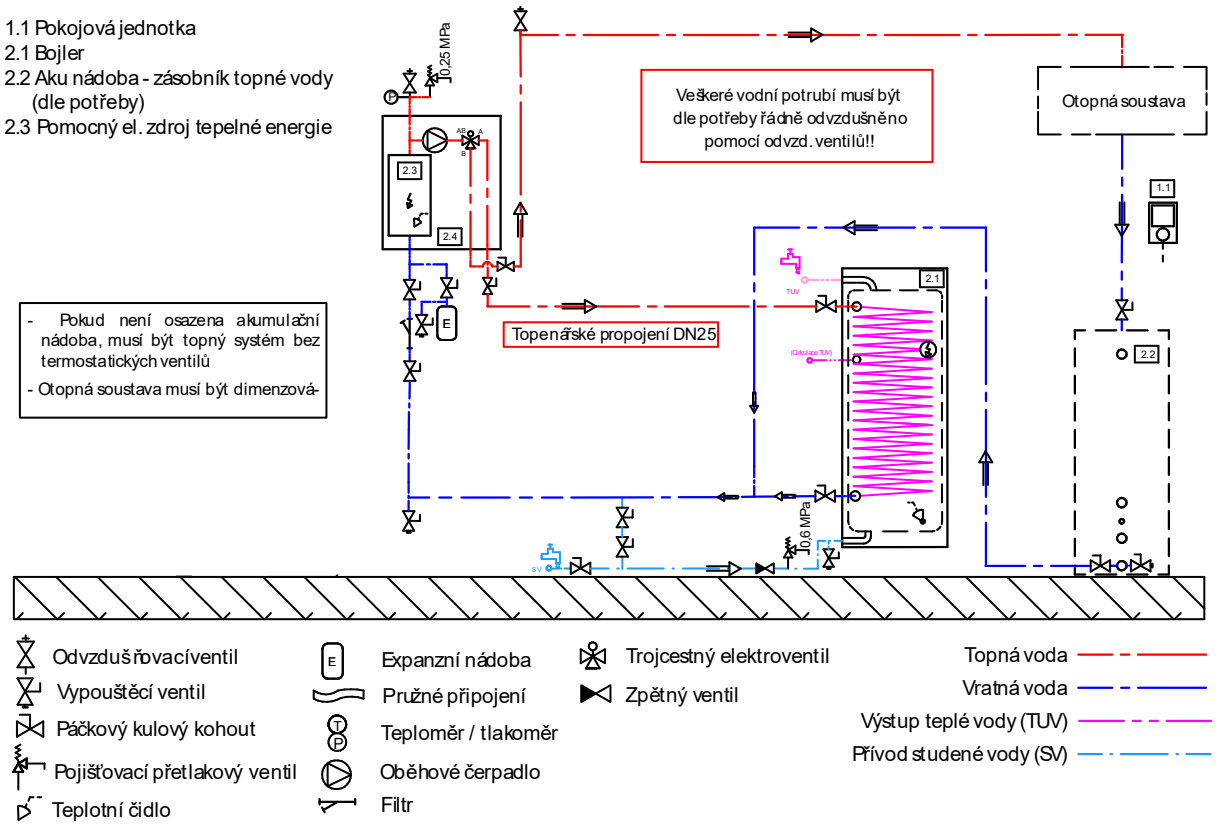

7.3.2 Mandatory hydraulic components

To ensure safe operation and possible replacement of equipment, it is necessary to use the following components at the appropriate points in the heating system

- Expansion vessel
- Heating water filter
- Ball valves
- Drain valve
- Reverse valve
- Safety valve

7.4 Filling the heating system

1. Pressure the expansion tank to the pressure determined according to the parameters of the heated object.
2. Pressure the heating system.
3. Vent the heating system.
4. Check the heating .
5. Check the tightness of the created heating joints.

7.5 Electrical wiring and commissioning

It is electrically connected using the diagrams supplied with this manual. The electrical wiring procedure is as follows:

1. Switch off the heat pump circuit breaker in the home switchboard.
2. By measuring the power cables, make sure that they are really disconnected from the electrical.
3. Remove the front cover
   a. Unscrew the two screws accessible from the bottom of the Hydromodule, see the following figure.

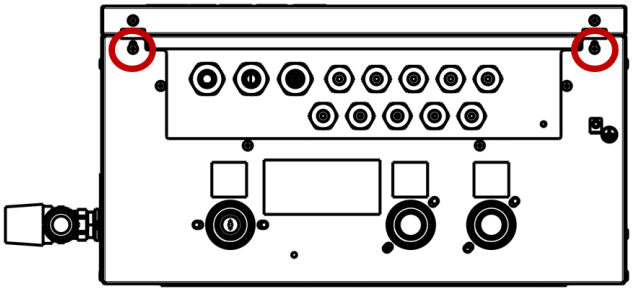

   b. Remove the lid by moving it up and then towards you.
4. Remove the control cabinet cover using four screws accessible from the front of the Hydromodule, see the following picture.

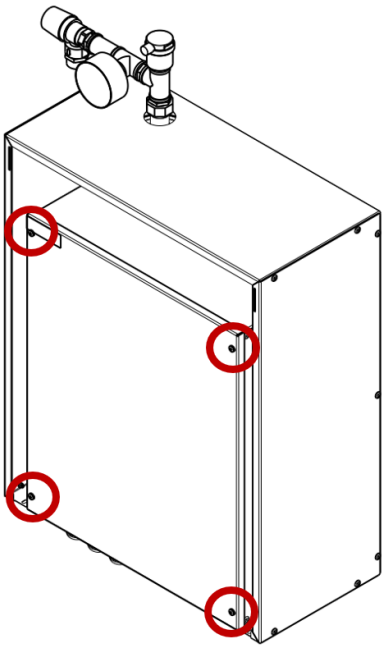

5. Connect the cables to the terminal board, see the following picture according to the attached diagrams.

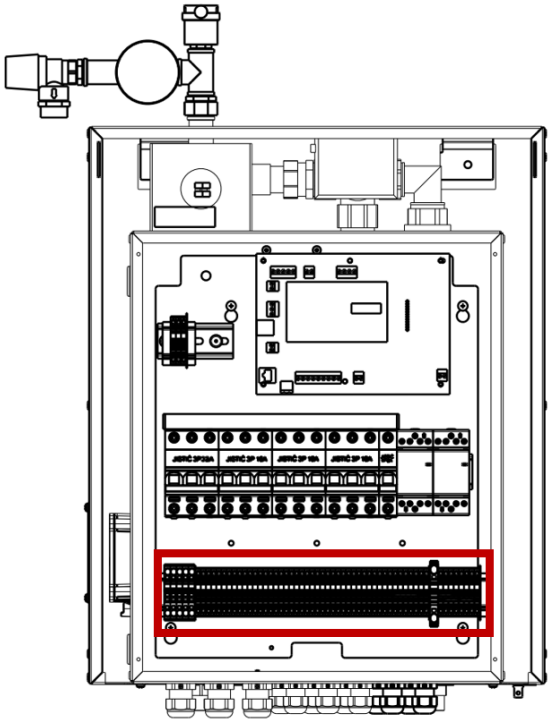

6. Connect the Ethernet cable to the lower slot on the control unit.
7. Connect the notebook to the middle Ethernet slot on the control unit.
8. Switch on the heat pump circuit breaker in the home switchboard.
9. Commissioning the Hydromodule with AcondThem control. Regulation guidance can be downloaded from the website https://acond.cz/tepelna-cerpadla/servis/
10. If everything is functional, cover the Hydromodule.

7.6 Cleaning after installation

Clean the Hydromodule with products designed for stainless materials.

8 Parameters setting

Setting of the parameters of heating water and hot water is carried out according to the instructions for regulation AcondTherm. Regulation guidance can be downloaded from the website https://acond.cz/tepelna-cerpadla/servis/.

9 Operation

The Hydromodule contains electrical components and therefore the front lid must not be removed!

9.1 Circulation pump operation and maintenance

A circulation pump is a component that has possible replacements according to market availability. The model of the circulation pump is written on its label. If one of the possible substitutes is used, visit the manufacturer's website to find the operating instructions for the circulation pump.

9.1.1 Circulation pump Grundfos UPM3 15-70 130

The circulation pump is accessible from the left side through a window. First, hold down the button (indicated by an arrow) until the LEDs start blinking. Then, to select the desired setting, press the button (marked with an arrow) until you find the setting you need. If you miss it, you must continue around until it reappears.

Display	Performance curve	State	Max. height of the building
	1	Low power	5m
	2	Medium power	6m
	3	High power	7m

9.1.2 Circulation pump malfunction

In the event of a breakdown, check what mode the pump is in and contact the service.

Display	Control mode
	Blocked pump
	Low supply voltage
	Electric fault

9.2 Checking the pressure of the heating system

The pressure check is carried out on a pressure gauge (position 4). In the event of a pressure drop in the heating system, pressure the heating system set by the installer.

9.3 Safety valve check

Turn the safety valve at least once every six months to check its functionality.

Be careful, hot water may flow out of the valve.

9.4 Disconnect from the mains

First, use the AcondTherm regulation to switch off the device and then disconnect the device from the main by switching off the circuit breaker in the main home switchboard.

9.5 Cleaning

Clean the hydromodule with products designed for stainless materials.

Do not use any types of sprays around the hydromodulu. This is especially true for

- Solvents
- Cleaning products containing chlorine
- Colors
- Glues

10 E-heater thermostat reset

The E-heater has a built-in safety thermostat that disconnects the heating rod from the power supply if the heating water temperature is too high. If this happens, it is necessary to manually reset the thermostat.

To reset the thermostat

1. Remove the Hydormodule covers, see chapter 7.5**.**
2. Diagnose if the thermostat is disconnected
   a. In the AcondTherm regulation, manually start the heating rod by clicking on the icon.
   b. Check whether the contactor of the heating rod (marked KM1) displays contactor (red color). If green is visible, the contactor has not switched on and the thermostat needs to be reset.
3. Switch off the circuit breaker in the home main switchboard.
4. Reset the thermostat is done by pressing the button, see the following picture.

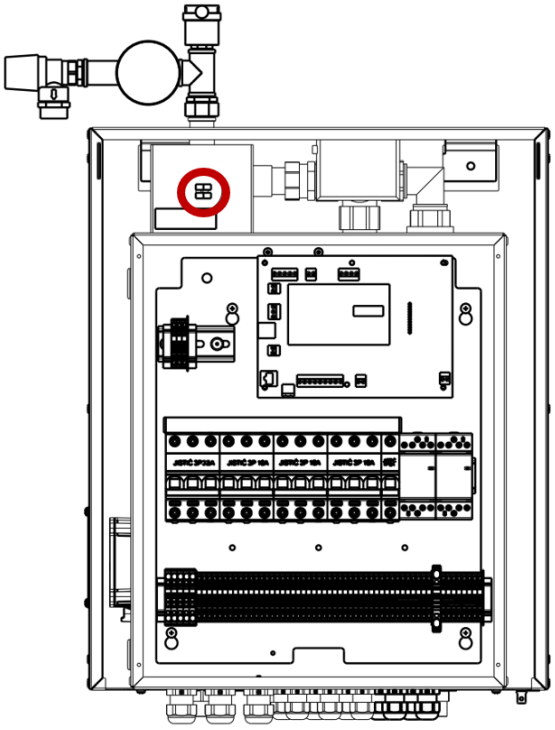

5. Switch on the circuit breaker in the home main switchboard.
6. Again, perform diagnostics. If a red alarm appears after manually switching on the heating rod, the heating rod is closed.
7. Cover the Hydromodul.

11 Warranty

The manufacturer provides a warranty for the product within the period, performance and under the conditions specified in the warranty card. The warranty card is included in the delivery and must be filled in for its validity.

12 Service

Service work on the product may only be carried out by authorized service technicians. For more, contact the plumbing company that performed the installation.